UPVC Cartridge Filter Housing



Plastic filter housing, also known as plastic precision filters, is composed of an UPVC housing filter cartridges inside. The housing features stable structure, strong environmental adaptability and durability.

It is mainly installed after multi-media pretreatment filtration and before membrane filtration equipment such as reverse osmosis and ultrafiltration. It is used to filter out the residual trace suspended solids, colloids, microorganisms in the water, as well as fine materials (such as tiny quartz sand, activated carbon particles, etc.) after multi-media filtration, to ensure the water filtration accuracy and protect the membrane filtration element from damage by large particles. It has certain price advantages when compared with stainless steel filter housings and FRP filter housings.

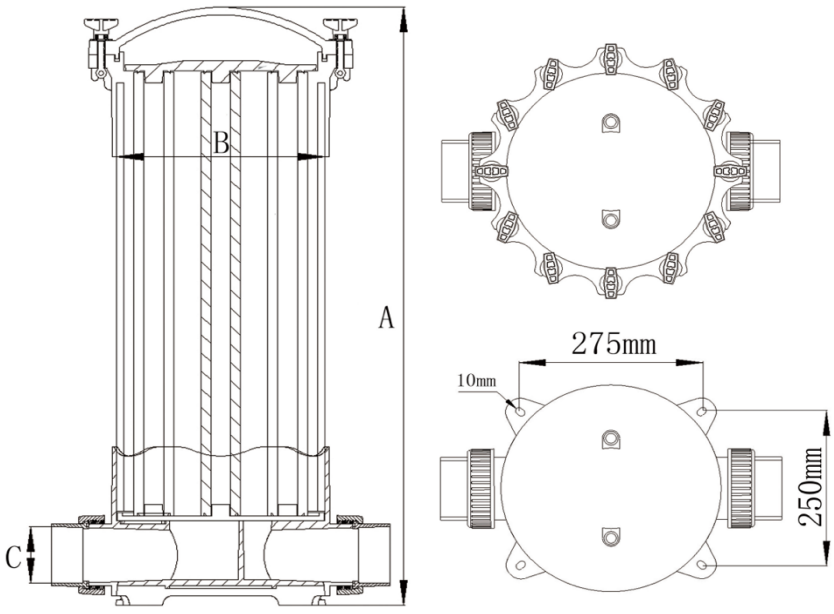

No.	Dimension			Filter Dimension	Material	Maximum working pressure
	A	B	C			
HCPVC-20-9	745	315	89	20"	UPVC	6 Bar
HCPVC-30-9	995	315	89	30"	UPVC	6 Bar
HCPVC-40-9	1245	315	89	40"	UPVC	6 Bar

STASIUN FILTER INDONESIA
www.stasiunfilter.com / sales@stasiunfilter.com